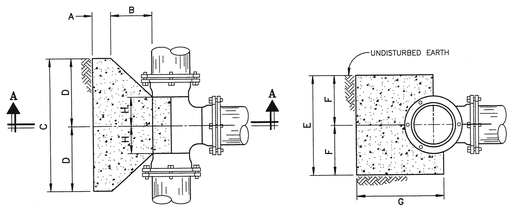

PLAN

SECTION A–A

TEE SIZE	A	B	C	D	E	F	G	H
8" X 8"	0'–9"	0'–9"	2'–8"	1'–4"	2'–0"	1'–0"	2'–2"	0'–7"
12" X 8"	0'–9"	0'–9"	2'–8"	1'–4"	2'–0"	1'–0"	2'–6"	0'–8"
16" X 8"	0'–9"	0'–9"	2'–8"	1'–4"	2'–0"	1'–0"	2'–10"	0'–8"
12" X 12"	0'–9"	1'–3"	4'–0"	2'–0"	3'–0"	1'–6"	2'–10"	0'–10"
16" X 12"	0'–9"	1'–3"	4'–0"	2'–0"	3'–0"	1'–6"	3'–4"	0'–10"
16" X 16"	1'–0"	1'–4"	4'–8"	2'–4"	4'–8"	2'–4"	3'–6"	1'–0"

NOTE: THRUST BLOCKS FOR 6" TEES SHALL MATCH THE REQUIREMENTS FOR 8" TEES

CONCRETE THRUST BLOCKS FOR TEES

NOT TO SCALE

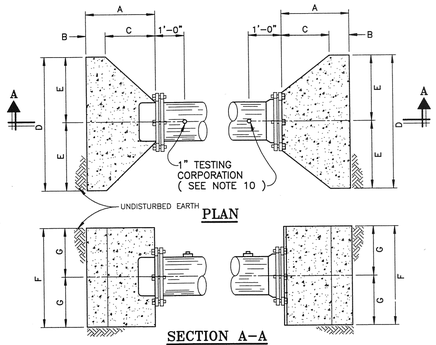

PLAN

SECTION A–A

SIZE	A MIN.	B MIN.	C	D	E	F	G
8"	1'–11"	0'–9"	1'–2"	3'–0"	1'–6"	2'–0"	1'–0"
12"	2'–1"	0'–9"	1'–4"	4'–0"	2'–0"	3'–0"	1'–6"
16"	2'–8"	1'–0"	1'–8"	5'–0"	2'–6"	4'–0"	2'–0"
24"	4'–2"	1'–6"	2'–8"	6'–0"	3'–0"	4'–0"	2'–0"

CONCRETE THRUST BLOCKS FOR CAPS

NOT TO SCALE

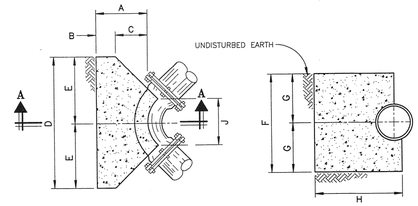

PLAN

SECTION A–A

SIZE	ANGLE	A (MIN.)	B (MIN.)	C	D	E	F	G	H (MIN.)	J
6"	45°	1'–6"	0'–9"	0'–9"	1'–6"	0'–9"	1'–6"	0'–9"	1'–8"	0'–10"
6"	90° *	1'–6"	0'–9"	0'–9"	2'–0"	1'–0"	2'–0"	1'–0"	1'–8"	0'–10"
8"	45°	1'–9"	0'–9"	1'–0"	2'–4"	1'–2"	2'–0"	1'–0"	1'–11"	1'–4"
8"	90° *	1'–9"	0'–9"	1'–0"	3'–4"	1'–8"	2'–6"	1'–3"	1'–11"	1'–2"
12"	22 1/2°	1'–9"	0'–9"	1'–0"	2'–6"	1'–3"	2'–0"	1'–0"	2'–0"	1'–4"
12"	45°	2'–1"	0'–9"	1'–4"	3'–6"	1'–9"	2'–6"	1'–3"	2'–4"	1'–4"
12"	90° *	2'–1"	0'–9"	1'–4"	5'–6"	2'–9"	3'–0"	1'–6"	2'–4"	1'–8"
16"	22 1/2°	2'–8"	1'–0"	1'–8"	3'–4"	1'–8"	2'–6"	1'–3"	3'–0"	1'–2"
16"	45°	2'–8"	1'–0"	1'–8"	5'–4"	2'–8"	3'–0"	1'–6"	3'–0"	2'–6"
16"	90° *	2'–8"	1'–0"	1'–8"	6'–0"	3'–0"	5'–0"	2'–6"	3'–0"	2'–8"
24"	90° *	4'–7"	1'–0"	3'–7"	10'–0"	5'–0"	7'–0"	3'–6"	5'–4"	2'–4"

* 90° BENDS TO BE INSTALLED ONLY WITH WRITTEN APPROVAL OF THE COMMUNITY

CONCRETE THRUST BLOCKS FOR HORIZONTAL BENDS

NOT TO SCALE

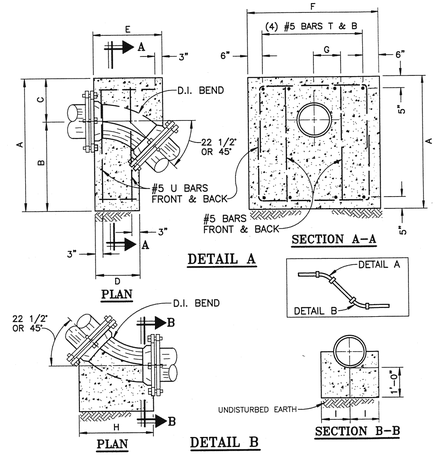

PLAN

DETAIL A

SECTION A–A

PLAN

DETAIL B

SECTION B–B

SIZE	ANGLE	A	B	C	D	E	F	G	H	I
8"	22 1/2°	3'–0"	1'–8"	1'–4"	1'–4"	1'–7"	2'–8"	0'–8"	1'–9"	1'–0"
8"	45°	4'–0"	2'–6"	1'–6"	1'–6"	1'–8"	3'–2"	0'–10"	2'–0"	1'–0"
12"	22 1/2°	4'–0"	2'–6"	1'–6"	1'–7"	2'–0"	4'–0"	0'–10"	2'–6"	1'–0"
12"	45°	4'–6"	3'–0"	1'–6"	1'–6"	2'–4"	5'–0"	0'–11"	2'–6"	1'–0"
16"	22 1/2°	4'–6"	2'–10"	1'–8"	1'–7"	2'–2"	5'–0"	0'–11"	2'–4"	1'–6"

ANCHORAGE FOR VERTICAL BENDS

NOT TO SCALE

NOTE:
MATERIAL SPECIFICATIONS SHALL COMPLY WITH M.D.O.T. STANDARD SPECIFICATIONS FOR CONSTRUCTION, CURRENT EDITION.

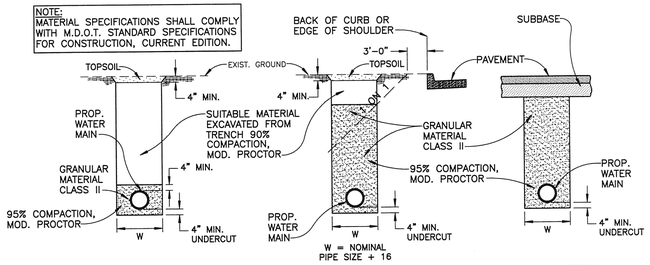

PROP. WATER MAINS NOT UNDER ROADBED

PROP. WATER MAINS UNDER ROADBED OR WITHIN INFLUENCE OF ROADBED

BEDDING & TRENCH DETAILS

NOT TO SCALE

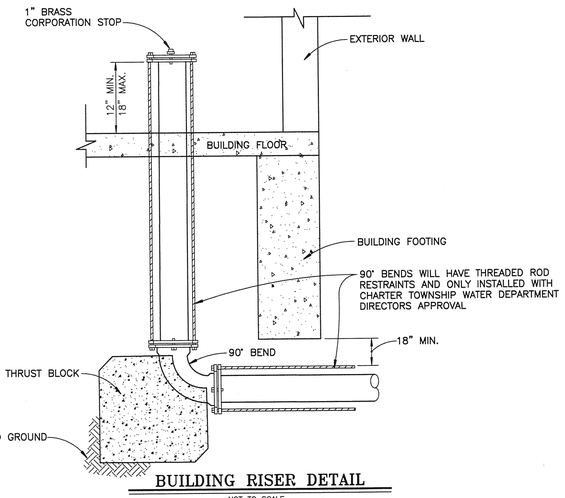

BUILDING RISER DETAIL

NOT TO SCALE

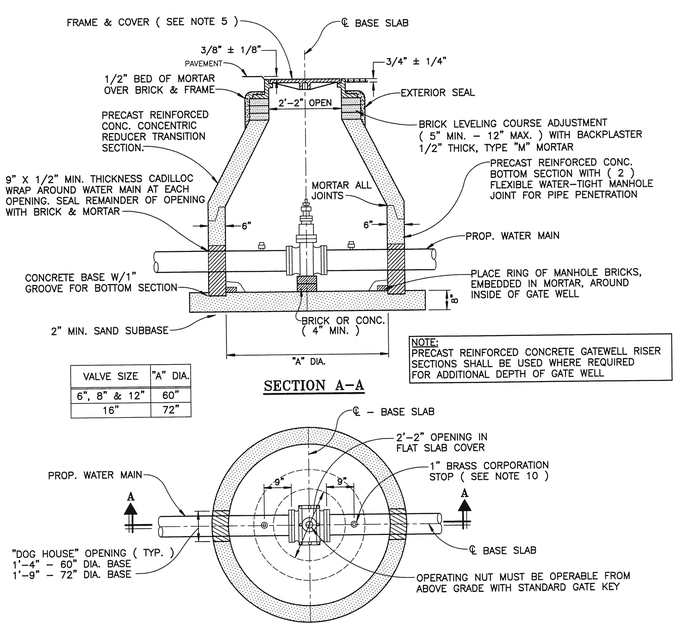

NOTE:
PRECAST REINFORCED CONCRETE GATEWELL RISER SECTIONS SHALL BE USED WHERE REQUIRED FOR ADDITIONAL DEPTH OF GATE WELL

VALVE SIZE	"A" DIA.
6", 8" & 12"	60"
16"	72"

SECTION A–A

GATE VALVE IN WELL

NOT TO SCALE

NOTE:
PRECAST REINFORCED CONCRETE GATEWELL RISER SECTIONS SHALL BE USED WHERE REQUIRED FOR ADDITIONAL DEPTH OF GATE WELL

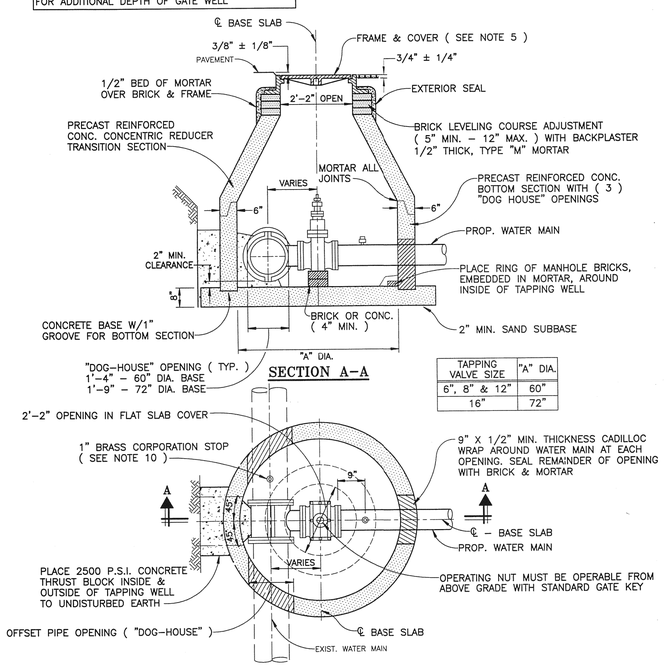

TAPPING VALVE SIZE	"A" DIA.
6", 8" & 12"	60"
16"	72"

SECTION A–A

TAPPING SLEEVE & VALVE IN WELL

NOT TO SCALE

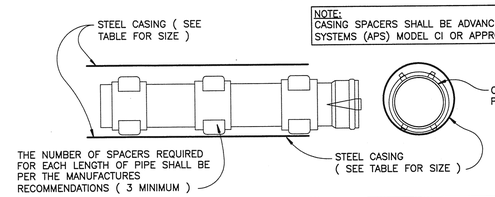

NOTE:
CASING SPACERS SHALL BE ADVANCED PRODUCT SYSTEMS (APS) MODEL CI OR APPROVED EQUAL

NOTE:
THE ENDS OF THE CASING SHALL BE SEALED AFTER THE WATER MAIN IS INSTALLED THROUGH THE CASING

NOTE:
FIELD LOCK GASKETS (OR APPROVED EQUAL) ARE REQUIRED ON ALL JOINTS INSIDE CASING & FIRST JOINT OUTSIDE CASING

PIPE SIZE	RECOMMENDED MINIMUM CASING DIAMETER (O.D.)	MINIMUM CASING WALL THICKNESS
4"	12.75"	0.375"
6"	14"	0.375"
8"	16"	0.375"
12"	20"	0.375"
16"	24"	0.406"
24"	36"	0.532"

STEEL CASING REQUIREMENTS

NOT TO SCALE

Civil Engineers
Surveyors
Architects
Environmentally Sound Communities

ANDERSON, ECKSTEIN AND WESTRICK, INC.

51301 Schoenherr Road
Shelby Township
Michigan 48315

Phone 586 726 1234
Fax 586 726 8780

www.aewinc.com

WELCOME TO Chesterfield GATEWAY TO ANCHOR BAY 1842

DATE	SUBMITTALS/REVISIONS

DRAWN BY:	CHECKED BY:	DATE:
MJS	AAP	SEPTEMBER 2010

G:\COMMUNITY\CHSTRFLD\STD_DETS\NEW DETAILS-PRELIMINARY\WATER_2.DWG
Model--9/1/2010 10:45:20 AM

STATE OF MICHIGAN GORDON B. WILSON ENGINEER No. 34055 LICENSED PROFESSIONAL ENGINEER

GORDON B. WILSON P.E. NO. 34055

WATER DEPARTMENT

APPROVED BY: JOSEPH J. GAYESKI, DIRECTOR

DATE: 9/2/2010

CHARTER TOWNSHIP OF CHESTERFIELD

STANDARD WATER MAIN DETAILS (2 OF 2)

SHEET NO.

W2

COPYRIGHT, 2010, ANDERSON, ECKSTEIN AND WESTRICK, INC.